HEATER ONLY

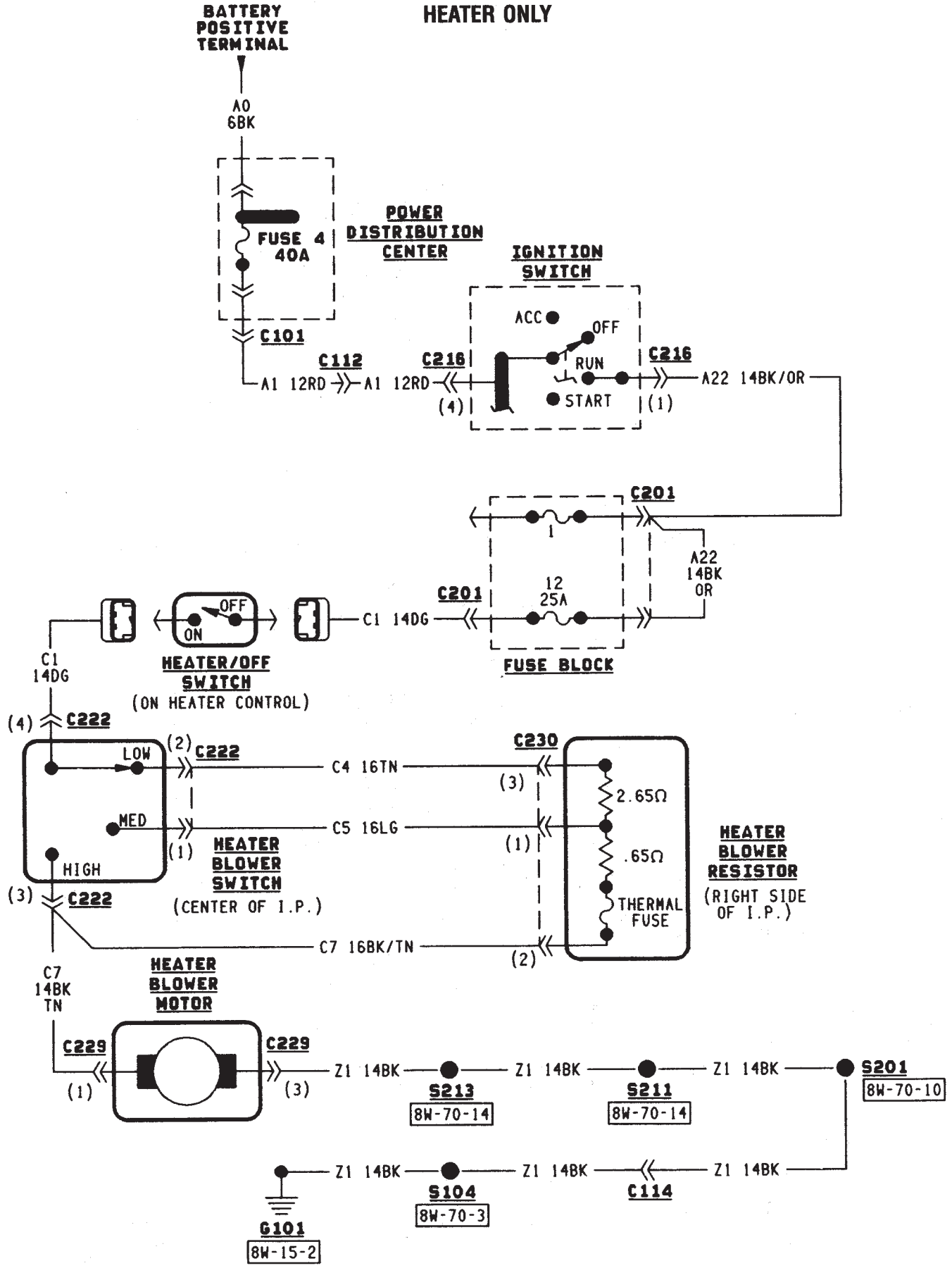
BATTERY POSITIVE TERMINAL
A0 6BK
FUSE 4 40A
POWER DISTRIBUTION CENTER
C101
C112
A1 12RD
A1 12RD
C216
(4)
IGNITION SWITCH
ACC
OFF
RUN
START
C216
(1)
A22 14BK/OR
C201
1
12 25A
C201
A22 14BK OR
C1 14DG
OFF
ON
HEATER/OFF SWITCH
(ON HEATER CONTROL)
FUSE BLOCK
C1 14DG
(4) C222
(2) C222
LOW
MED
HIGH
(1)
(3) C222
HEATER BLOWER SWITCH
(CENTER OF I.P.)
C4 16TN
C5 16LG
C7 16BK/TN
C230
(3)
(1)
(2)
2.65Ω
.65Ω
THERMAL FUSE
HEATER BLOWER RESISTOR
(RIGHT SIDE OF I.P.)
C7 14BK TN
HEATER BLOWER MOTOR
C229
(1)
C229
(3)
Z1 14BK
S213
8W-70-14
Z1 14BK
S211
8W-70-14
Z1 14BK
S201
8W-70-10
Z1 14BK
S104
8W-70-3
Z1 14BK
C114
Z1 14BK
G101
8W-15-2
J958W-5